Introduction to CMOS VLSI Design

Lecture 1: Intro to CMOS Circuits

David Harris

Harvey Mudd College

Spring 2004

Steven Levitan

Fall 2008

Outline

- A Brief History
- CMOS Gate Design
- Pass Transistors
- CMOS Latches & Flip-Flops
- Standard Cell Layouts
- Stick Diagrams

A Brief History

- 1958: First integrated circuit
  - Flip-flop using two transistors
  - Built by Jack Kilby at Texas Instruments
- 2003
  - Intel Pentium 4 μprocessor (55 million transistors)
  - 512 Mbit DRAM (> 0.5 billion transistors)
- 53% compound annual growth rate over 45 years
  - No other technology has grown so fast so long
- Driven by miniaturization of transistors
  - Smaller is cheaper, faster, lower in power!
  - Revolutionary effects on society

Annual Sales

- 10^{18} transistors manufactured in 2003
  - 100 million for every human on the planet

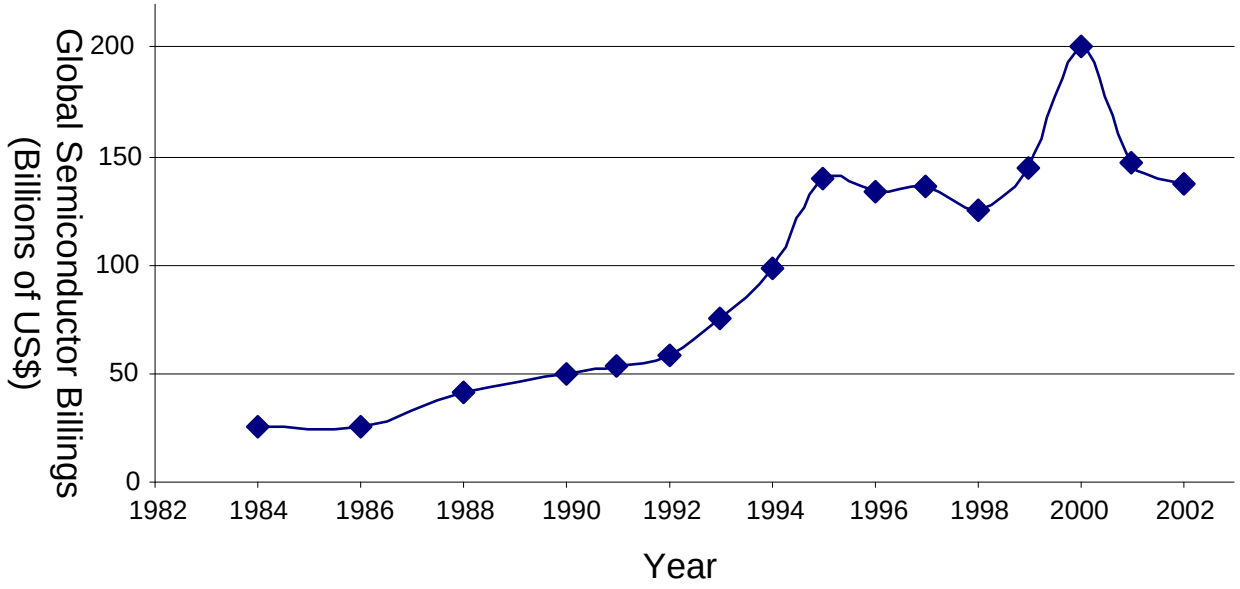

Invention of the Transistor

- Vacuum tubes ruled in first half of 20th century
  Large, expensive, power-hungry, unreliable
- 1947: first point contact transistor
  - John Bardeen and Walter Brattain at Bell Labs
  - Read *Crystal Fire*
    by Riordan, Hoddeson

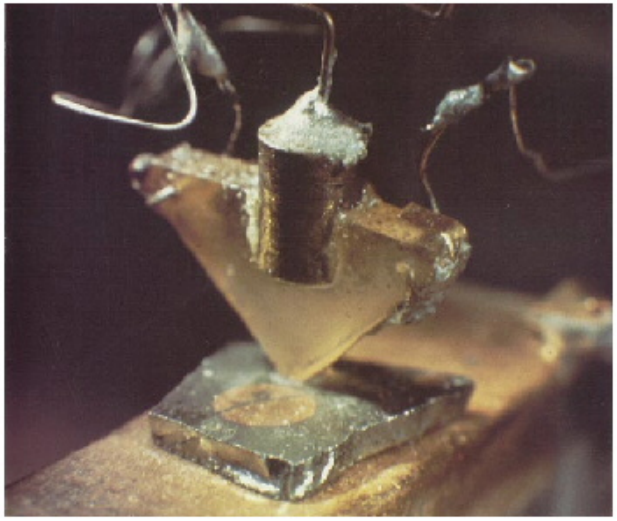

Transistor Types

- Bipolar transistors
  - npn or pnp silicon structure
  - Small current into very thin base layer controls large currents between emitter and collector
  - Base currents limit integration density
- Metal Oxide Semiconductor Field Effect Transistors
  - nMOS and pMOS MOSFETS
  - Voltage applied to insulated gate controls current between source and drain
  - Low power allows very high integration

MOS Integrated Circuits

- 1970's processes usually had only nMOS transistors
  - Inexpensive, but consume power while idle

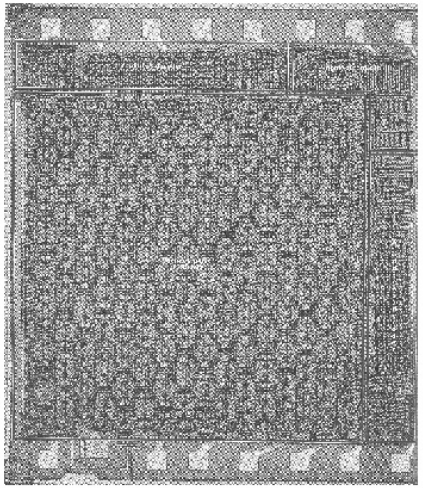

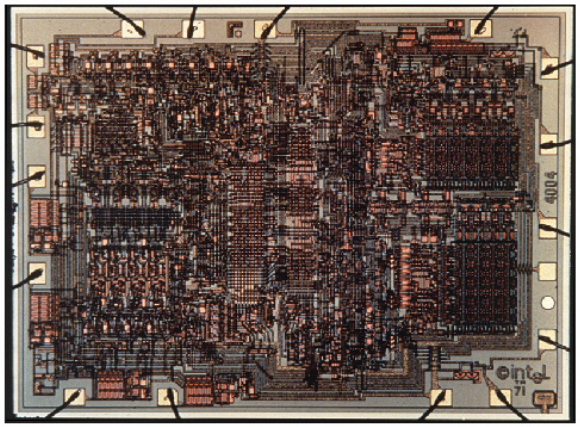

Intel 1101 256-bit SRAM Intel 4004 4-bit μProc

- 1980s-present: CMOS processes for low idle power

Moore's Law

- 1965: Gordon Moore plotted transistor on each chip
  - Fit straight line on semilog scale
  - Transistor counts have doubled every 26 months

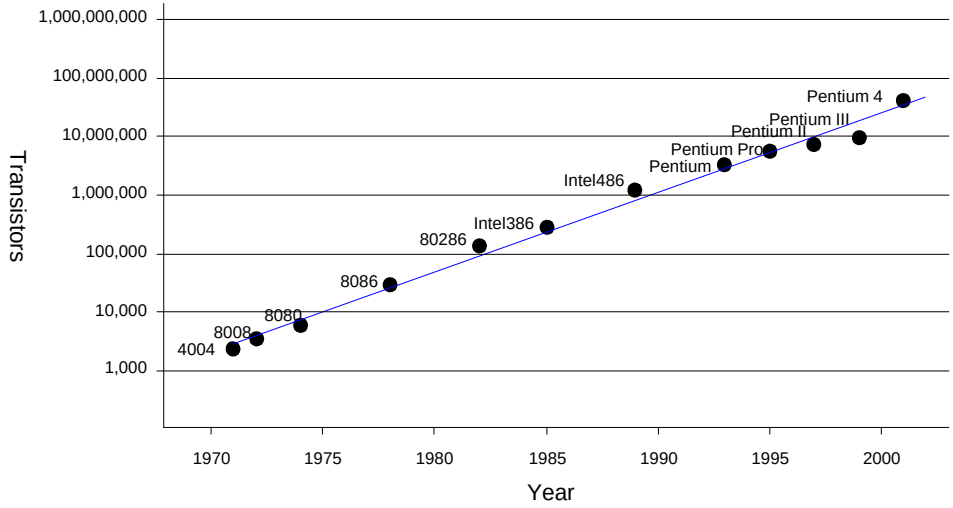

Integration Levels

SSI: 10 gates

MSI: 1000 gates

LSI: 10,000 gates

VLSI: > 10k gates

Corollaries

- Many other factors grow exponentially
  - Ex: clock frequency, processor performance

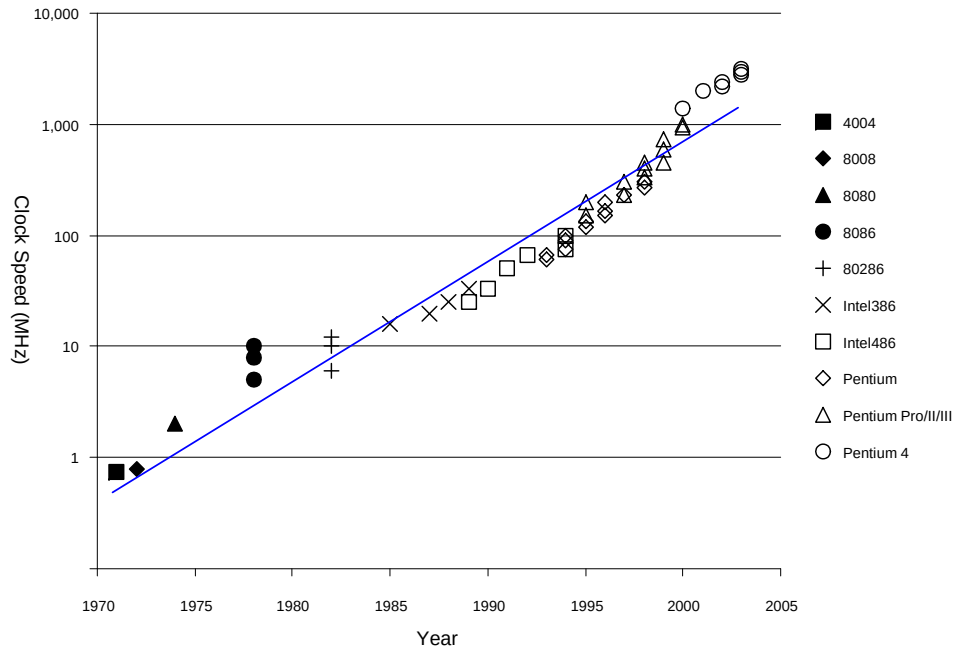

MOS transistors
Types and Symbols

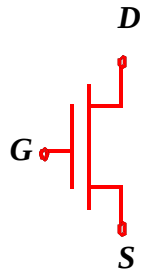

NMOS Enhancement

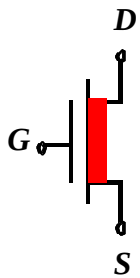

NMOS Depletion

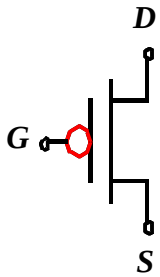

PMOS Enhancement

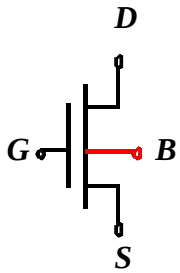

NMOS with
Bulk Contact

Do not forget:
These are all 4
terminal devices

The Basic Idea…

- Voltage on the Gate controls the current through the source/drain path
- N-Channel - N-Switches are ON when the Gate is HIGH and OFF when the Gate is LOW
- P-Channel - P-Switches are OFF when the Gate is HIGH and ON when the Gate is LOW
- (ON == Circuit between Source and Drain)

Transistors as Switches

N Switch

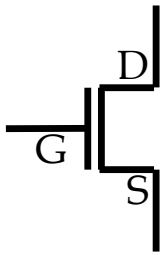

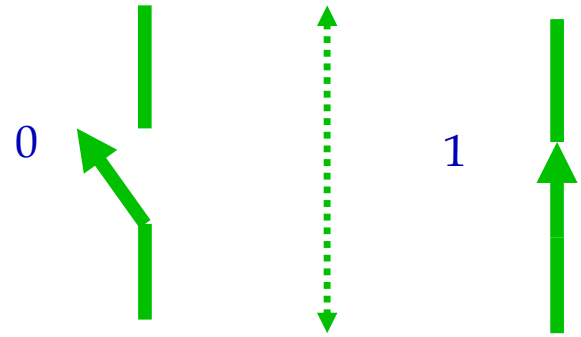

Passes "good zeros"

P Switch

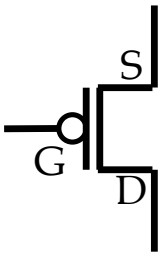

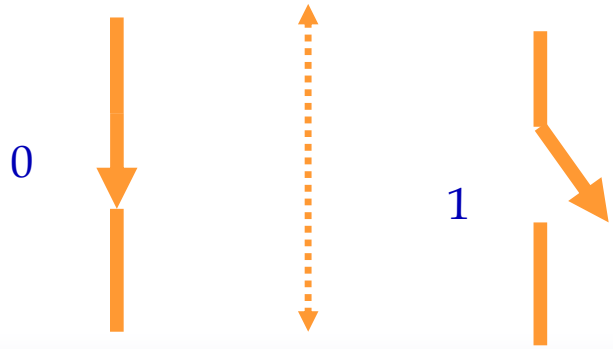

Passes "good ones"

Four Views

Logic Transistor Layout Physical

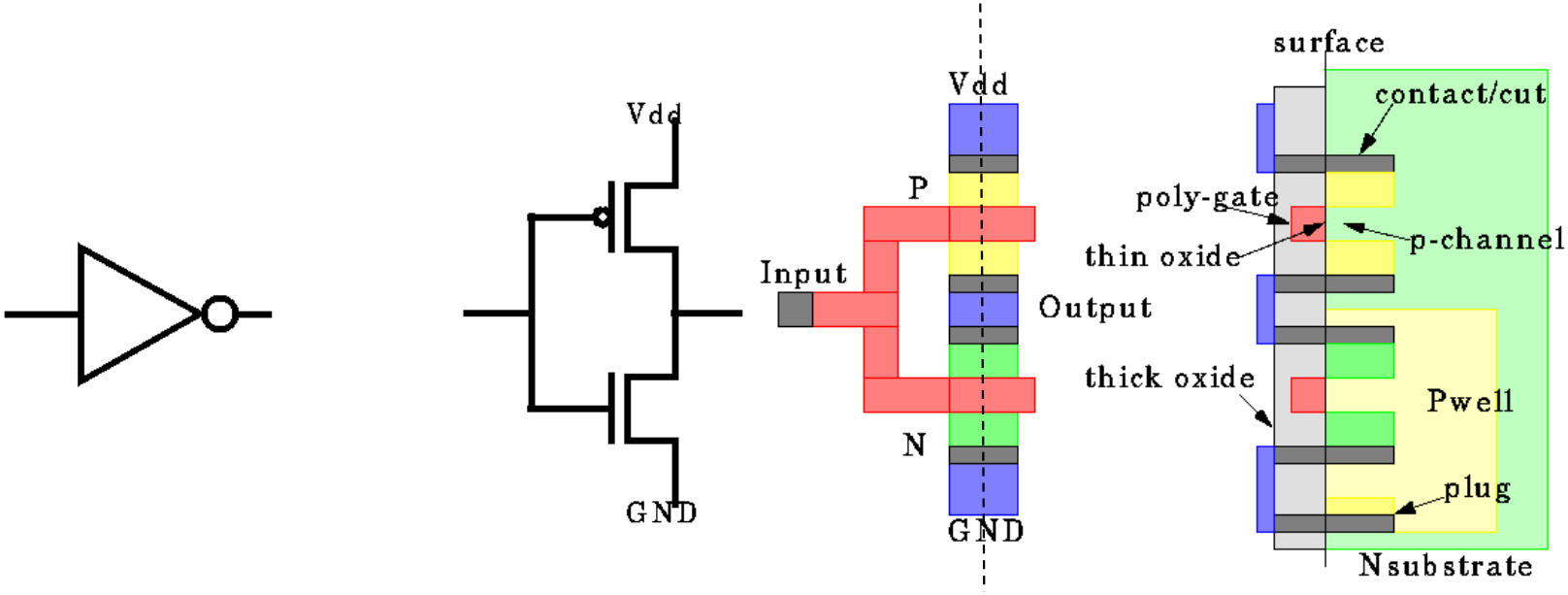

CMOS N Well Process

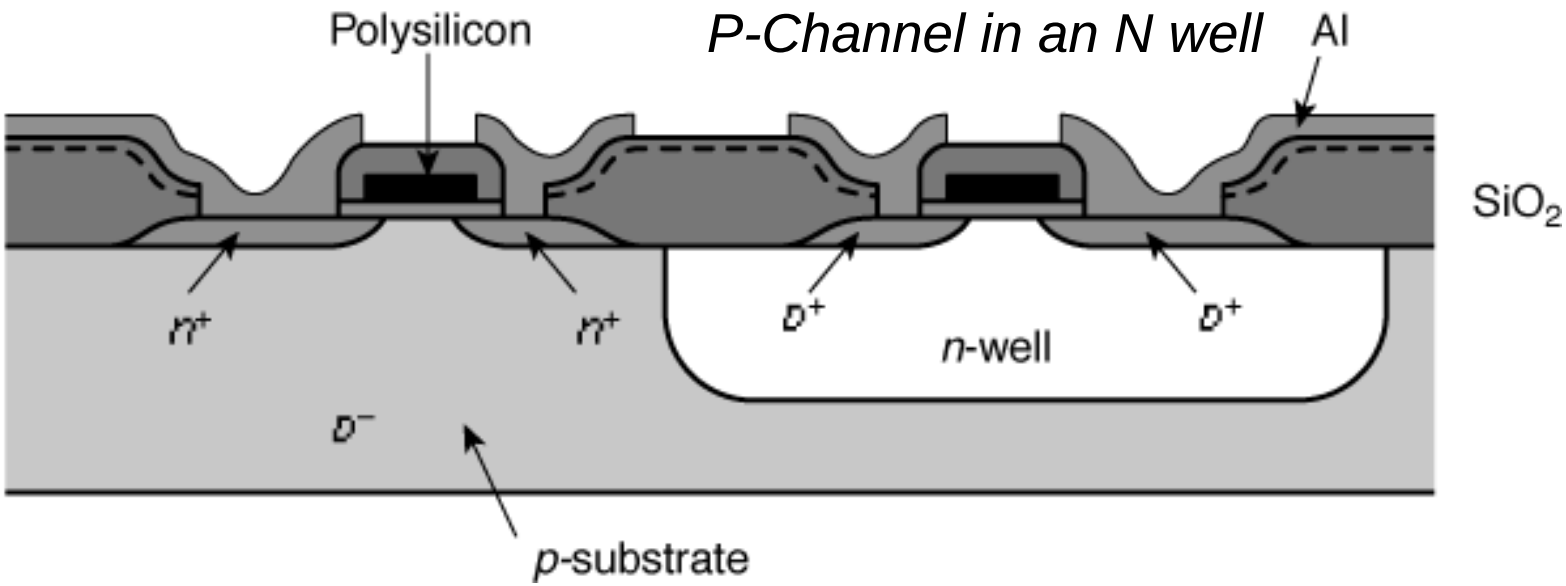

N-Channel in a P substrate

3D Perspective

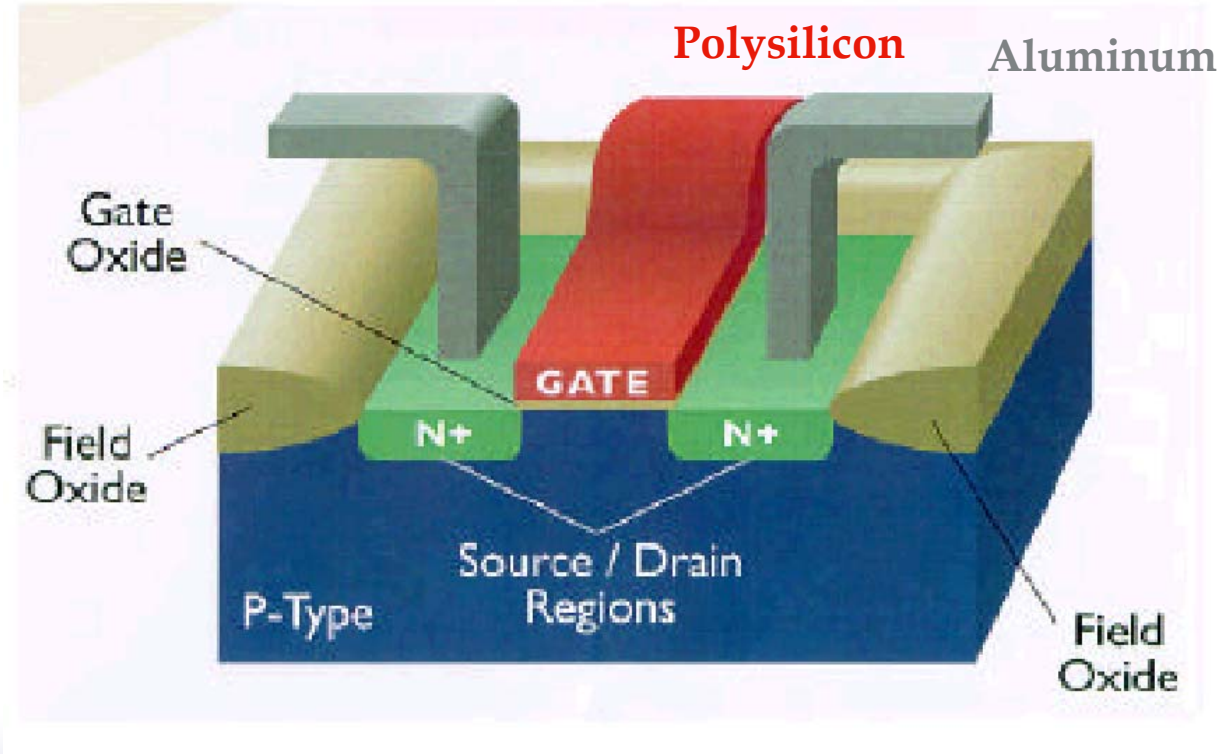

A Modern Dual Well CMOS Process

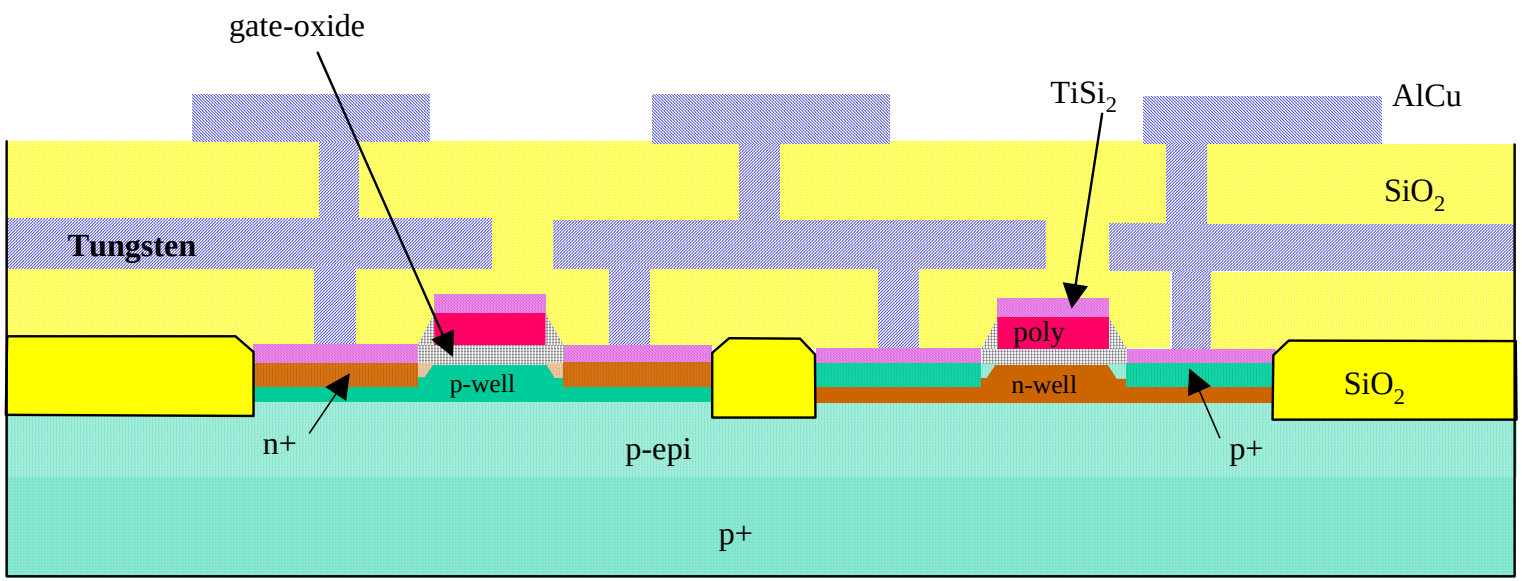

Dual-Well Trench-Isolated CMOS Process

epi – epitaxial = grown with matching crystal structure
TiSi – silicide = low resistance coating
(real trenches are much deeper)

Complementary CMOS

- Complementary CMOS logic gates
  - nMOS *pull-down network*
  - pMOS *pull-up network*
  - a.k.a. static CMOS

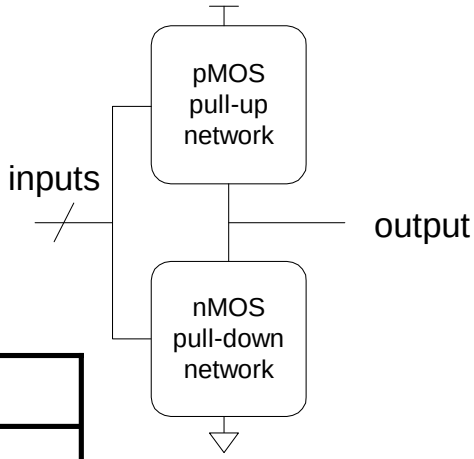

	Pull-up OFF	Pull-up ON
Pull-down OFF	Z (float)	1
Pull-down ON	0	X (crowbar)

Series and Parallel

- nMOS: 1 = ON
- pMOS: 0 = ON
- *Series*: both must be ON
- *Parallel*: either can be ON

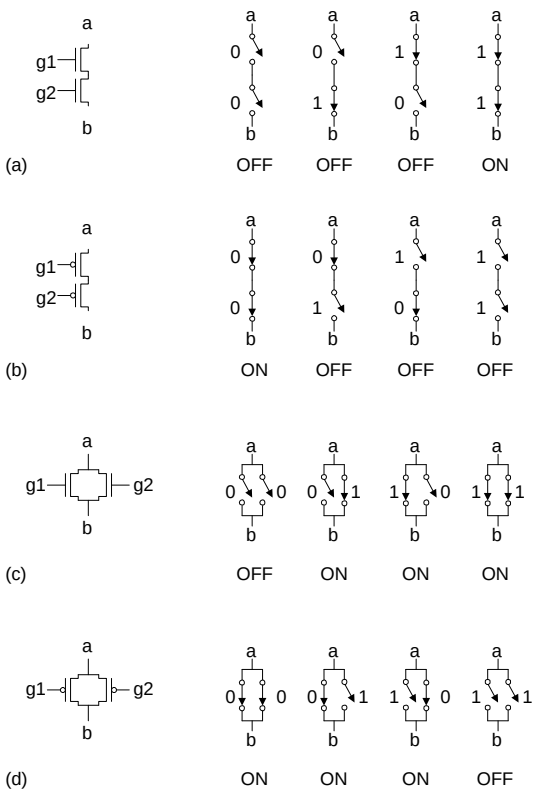

Conduction Complement

- Complementary CMOS gates always produce 0 or 1
- Ex: NAND gate
  - Series nMOS: Y=0 when both inputs are 1
  - Thus Y=1 when either input is 0
  - Requires parallel pMOS

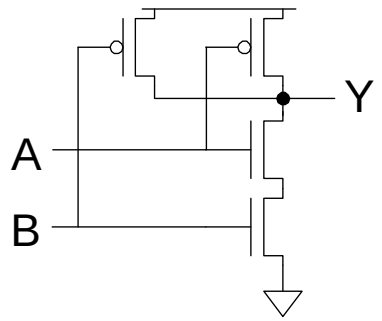

- Rule of *Conduction Complements*
  - Pull-up network is complement of pull-down
  - Parallel -> series, series -> parallel

CMOS Gate Design

- Activity:
  - Sketch a 4-input CMOS NAND gate

CMOS Gate Design

- Activity:
  - Sketch a 4-input CMOS NOR gate

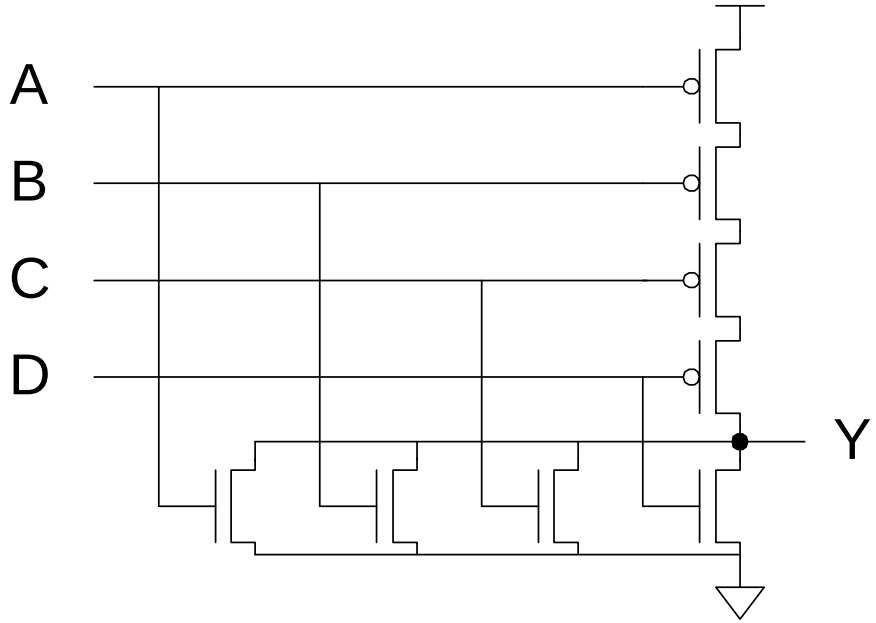

Compound Gates

- *Compound gates* can do any inverting function
- Ex: $Y = \overline{A \cdot B + C \cdot D}$ (AND-AND-OR-INVERT, AOI22)

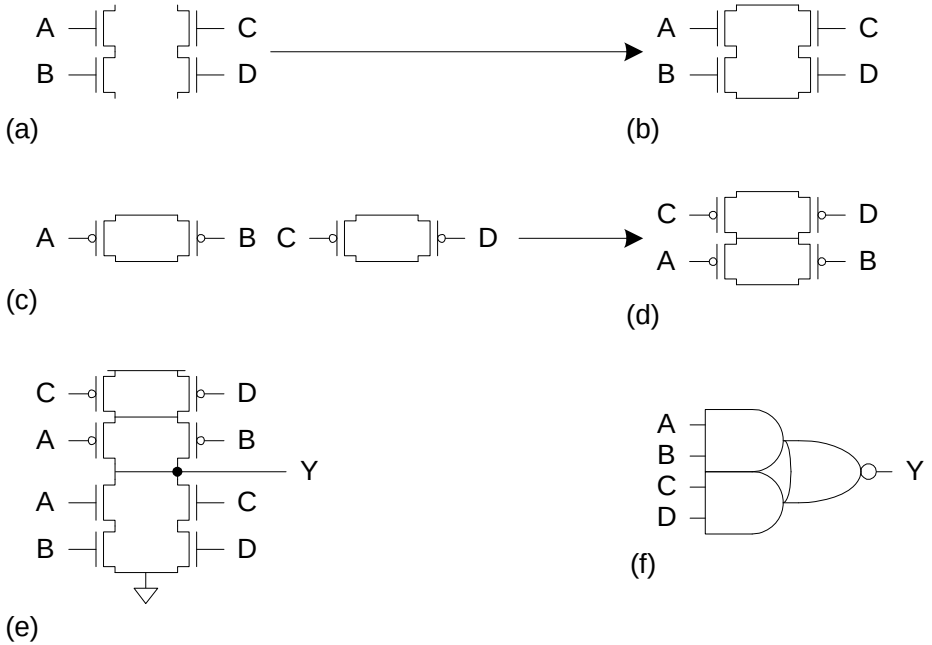

Example: O3AI

- $Y = \overline{(A + B + C) \cdot D}$

Example: O3AI

- $Y = \overline{(A + B + C) \cdot D}$

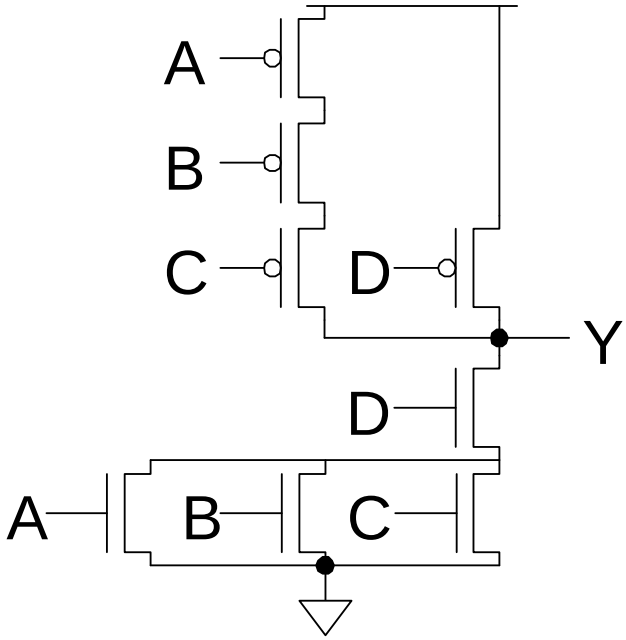

Signal Strength

- *Strength* of signal
  - How close it approximates ideal voltage source
- V_{DD} and GND rails are strongest 1 and 0
- nMOS pass strong 0
  - But degraded or weak 1
- pMOS pass strong 1
  - But degraded or weak 0
- Thus nMOS are best for pull-down network

Pass Transistors

- Transistors can be used as switches

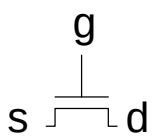

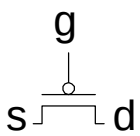

Pass Transistors

- Transistors can be used as switches

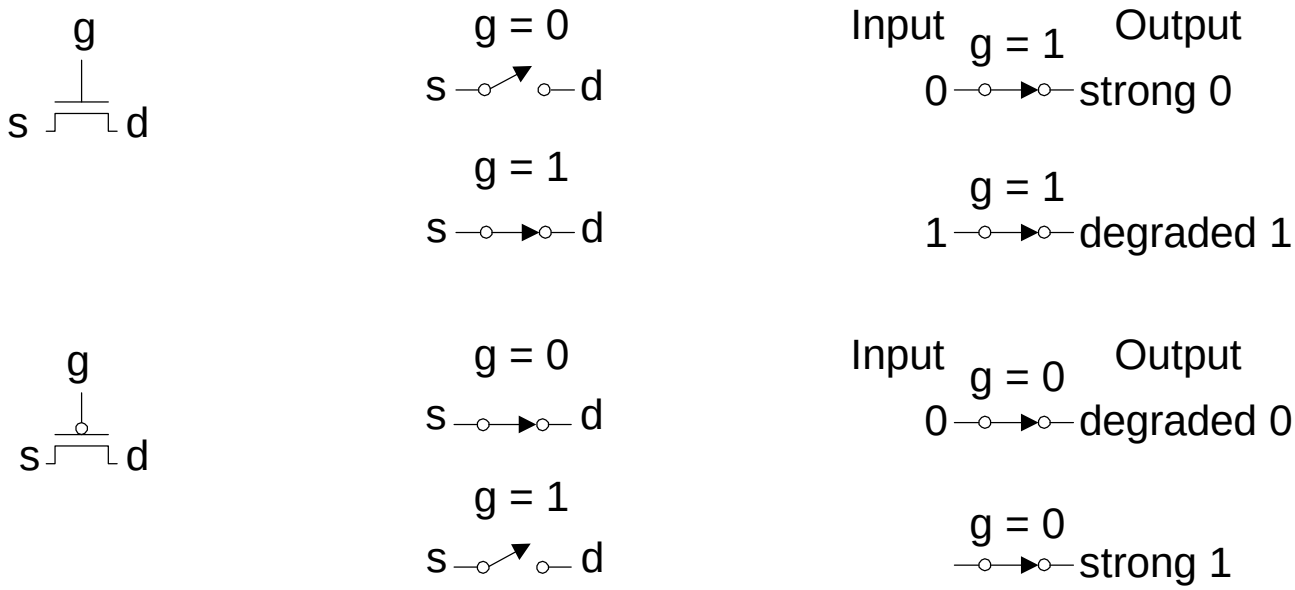

Transmission Gates

- Pass transistors produce degraded outputs
- *Transmission gates* pass both 0 and 1 well

Transmission Gates

- Pass transistors produce degraded outputs
- *Transmission gates* pass both 0 and 1 well

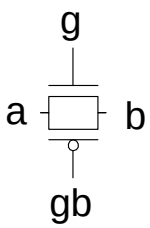

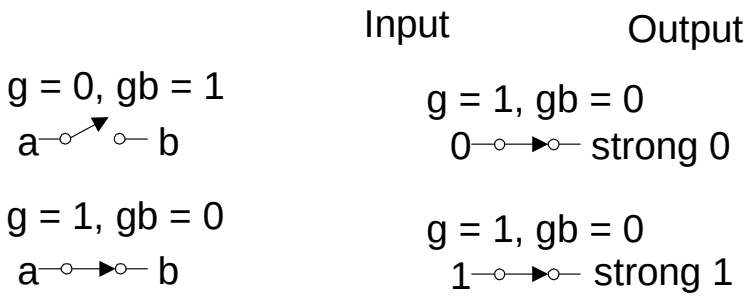

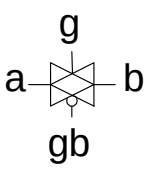

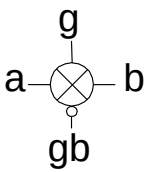

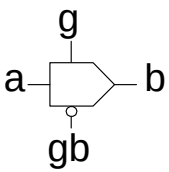

Tristates

- *Tristate buffer* produces Z when not enabled

EN	A	Y
0	0	
0	1	
1	0	
1	1	

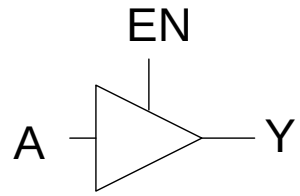

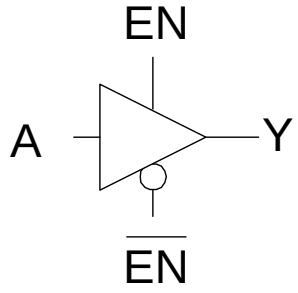

Tristates

- *Tristate buffer* produces Z when not enabled

EN	A	Y
0	0	Z
0	1	Z
1	0	0
1	1	1

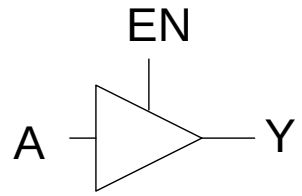

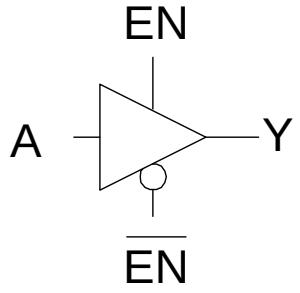

Nonrestoring Tristate

- Transmission gate acts as tristate buffer
  - Only two transistors
  - But *nonrestoring*
    - Noise on A is passed on to Y

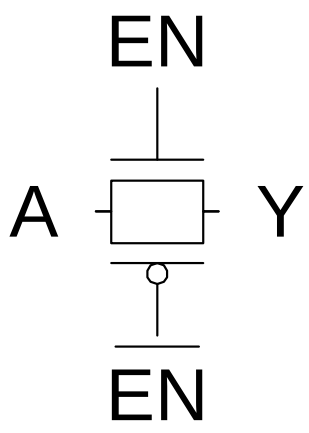

Tristate Inverter

- Tristate inverter produces restored output
  - Violates conduction complement rule
  - Because we want a Z output

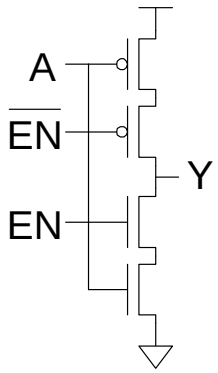

Tristate Inverter

- Tristate inverter produces restored output
  - Violates conduction complement rule
  - Because we want a Z output

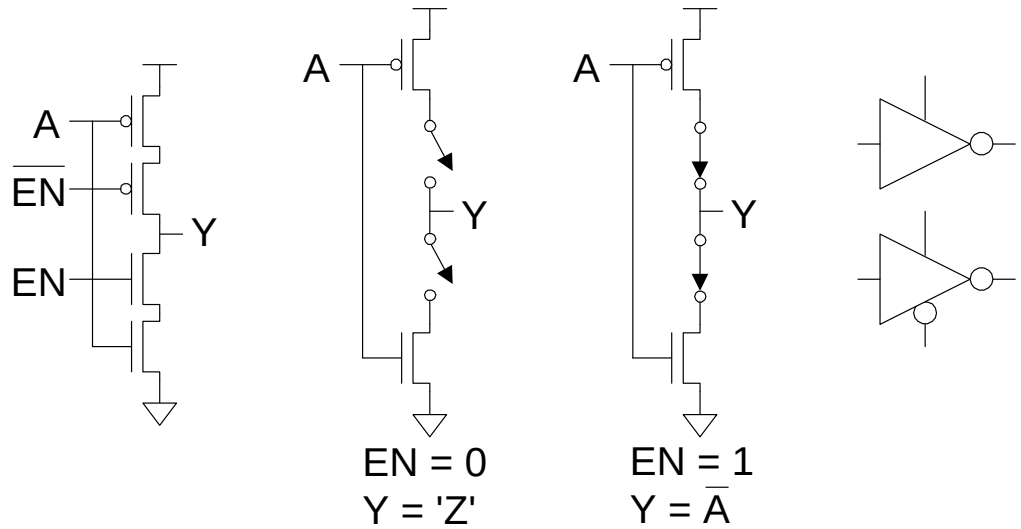

Multiplexers

- 2:1 *multiplexer* chooses between two inputs

S	D1	D0	Y
0	X	0	
0	X	1	
1	0	X	
1	1	X	

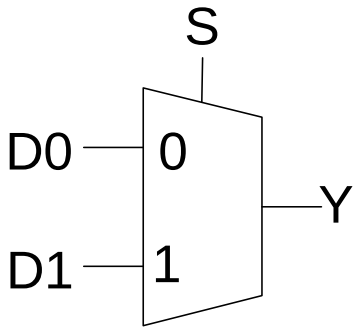

Multiplexers

- 2:1 multiplexer chooses between two inputs

S	D1	D0	Y
0	X	0	0
0	X	1	1
1	0	X	0
1	1	X	1

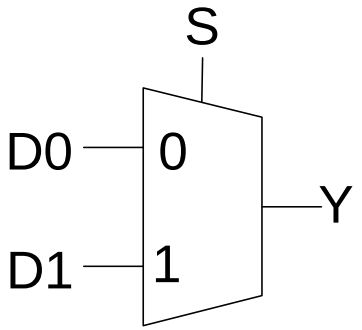

Gate-Level Mux Design

- $Y = SD_1 + \overline{S}D_0$ (too many transistors)
- How many transistors are needed?

Gate-Level Mux Design

- $Y = SD_1 + \overline{S}D_0$ (too many transistors)
- How many transistors are needed? 20

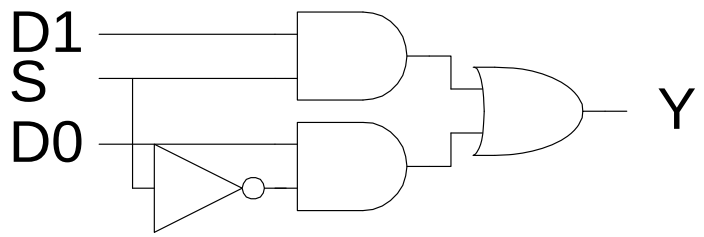

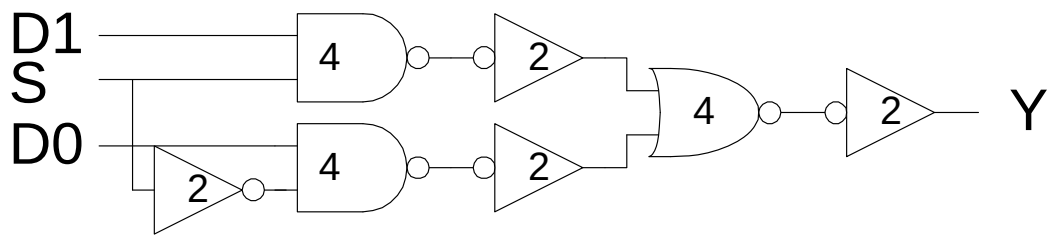

Transmission Gate Mux

- Nonrestoring mux uses two transmission gates

Transmission Gate Mux

- Nonrestoring mux uses two transmission gates
  - Only 4 transistors

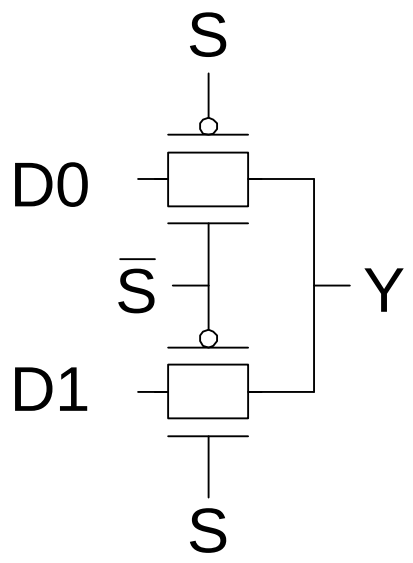

Inverting Mux

- Inverting multiplexer
  - Use compound AOI22
  - Or pair of tristate inverters
  - Essentially the same thing
- Noninverting multiplexer adds an inverter

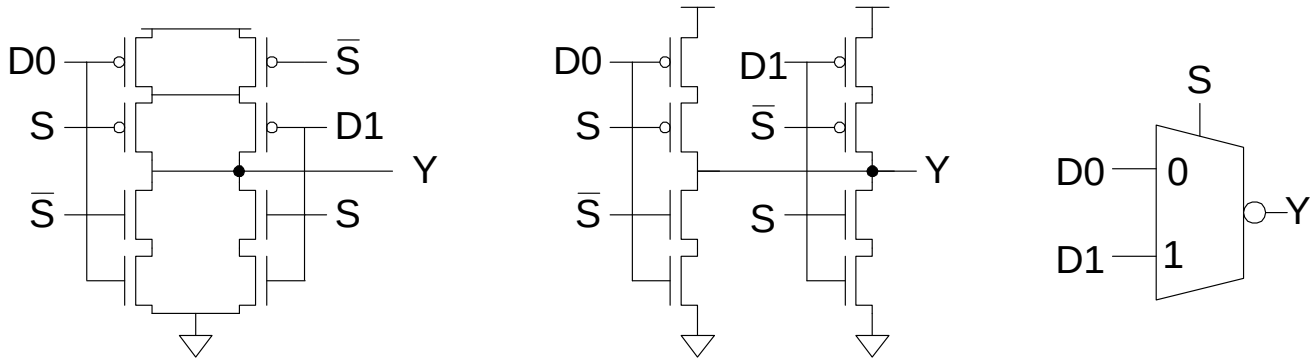

4:1 Multiplexer

- 4:1 mux chooses one of 4 inputs using two selects

4:1 Multiplexer

- 4:1 mux chooses one of 4 inputs using two selects
  - Two levels of 2:1 muxes
  - Or four tristates

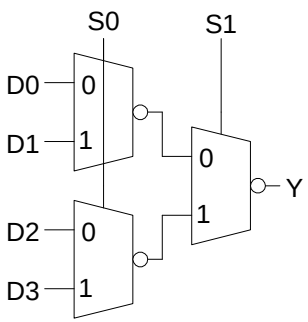

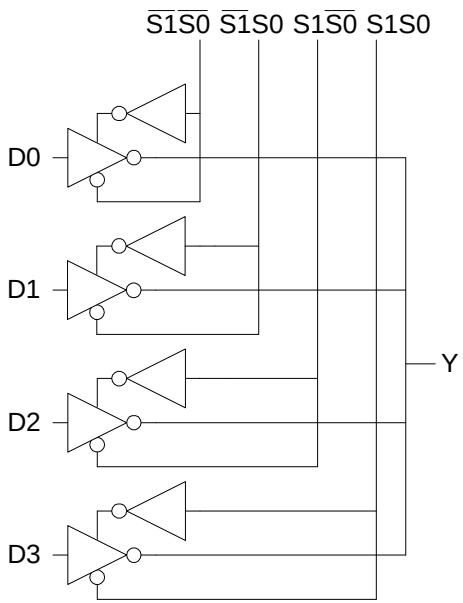

D Latch

- When CLK = 1, latch is *transparent*
  - D flows through to Q like a buffer
- When CLK = 0, the latch is *opaque*
  - Q holds its old value independent of D
- a.k.a. *transparent latch* or *level-sensitive latch*

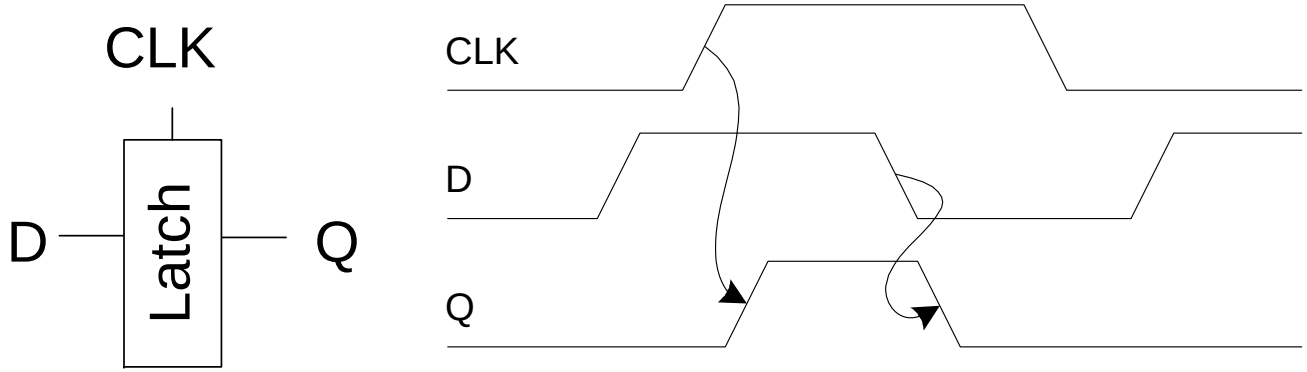

D Latch Design

- Multiplexer chooses D or old Q

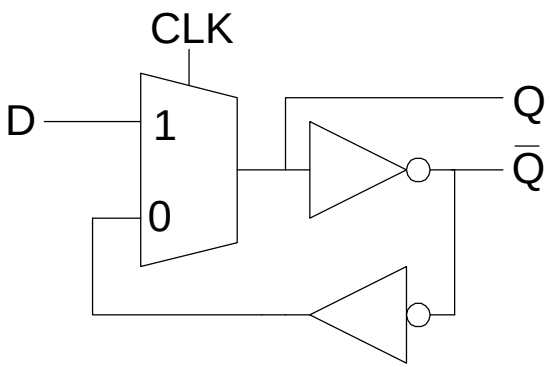

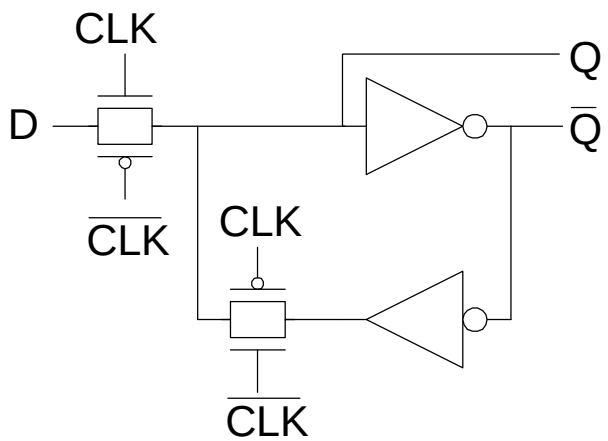

D Latch Operation

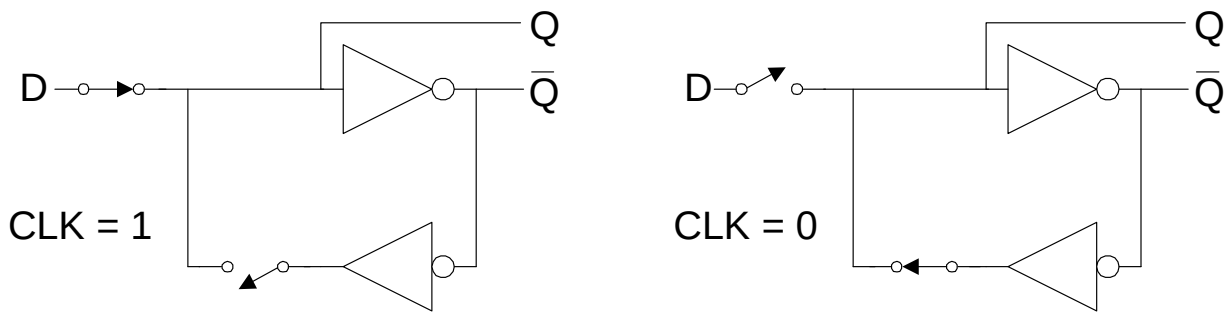

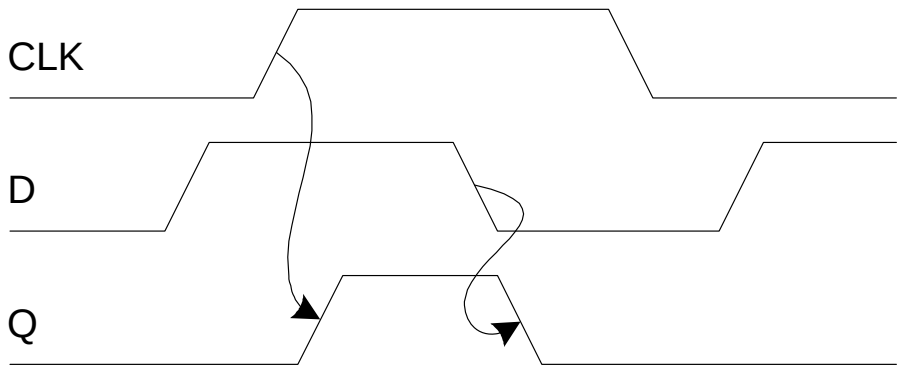

D Flip-flop

- When CLK rises, D is copied to Q
- At all other times, Q holds its value
- a.k.a. *positive edge-triggered flip-flop*, *master-slave flip-flop*

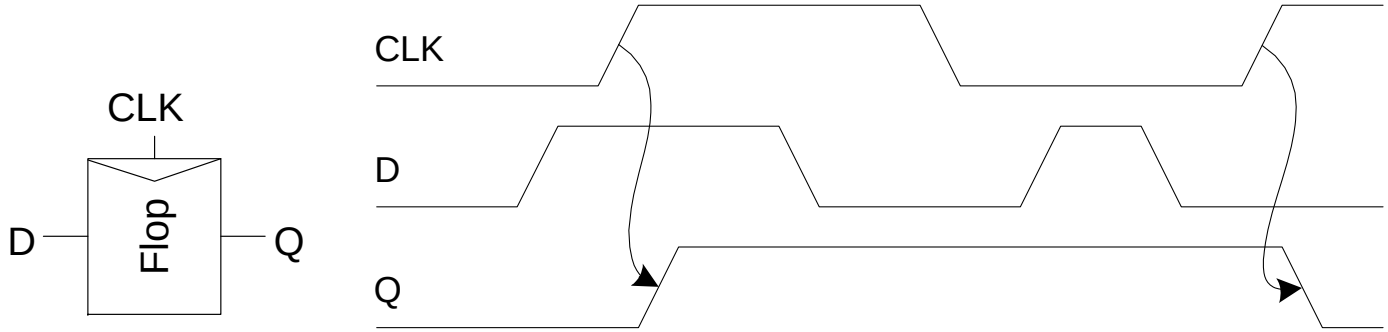

D Flip-flop Design

- Built from master and slave D latches

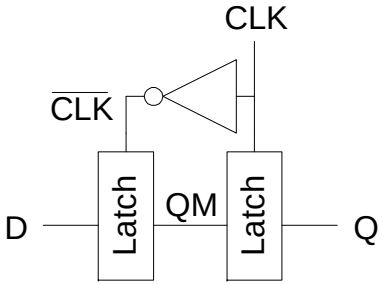

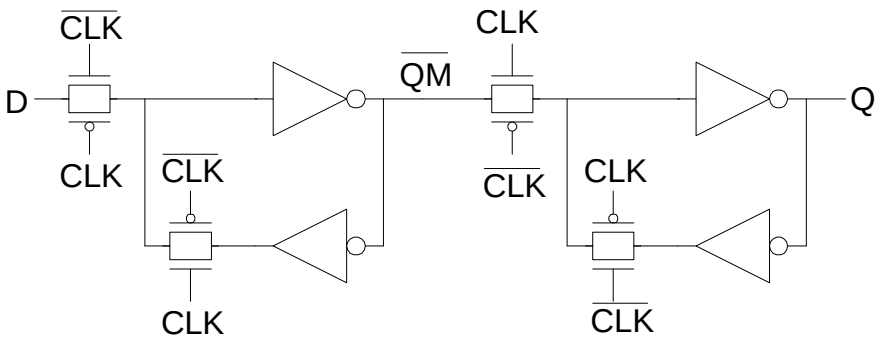

D Flip-flop Operation

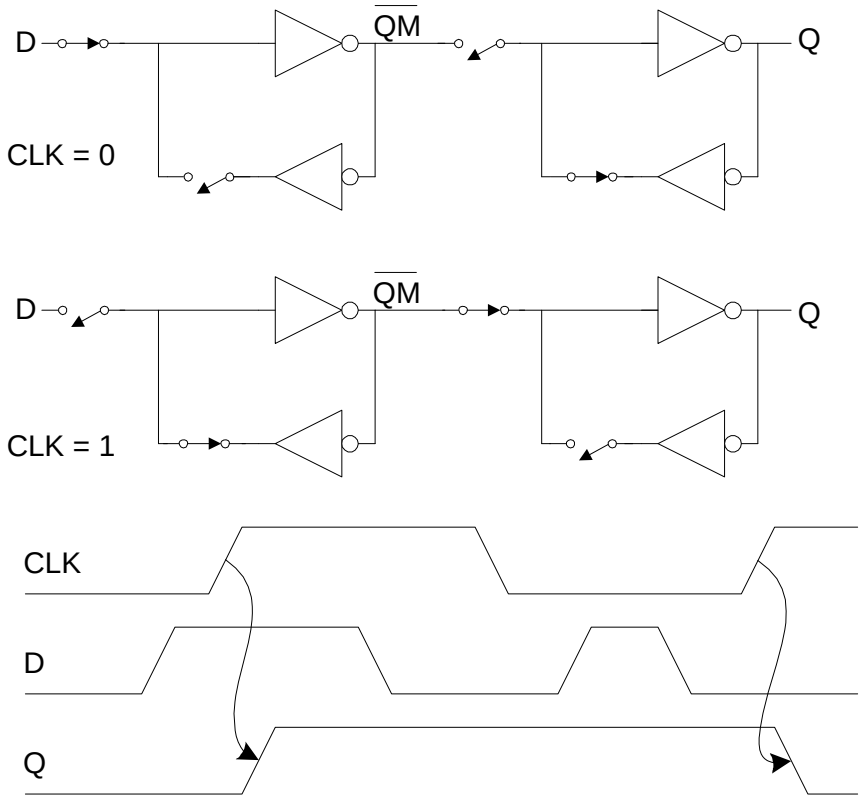

Race Condition

- Back-to-back flops can malfunction from clock skew
  - Second flip-flop fires late
  - Sees first flip-flop change and captures its result
  - Called *hold-time failure* or *race condition*

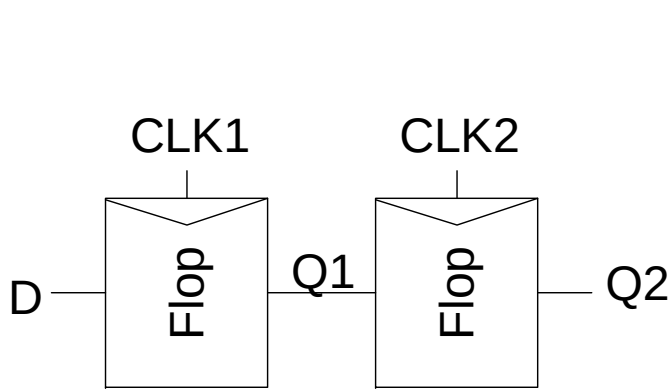

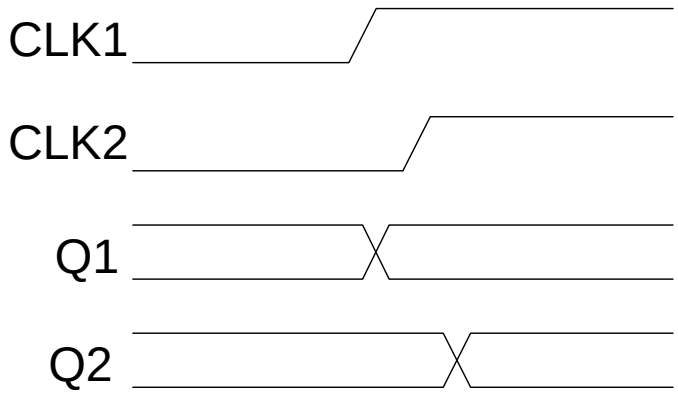

Nonoverlapping Clocks
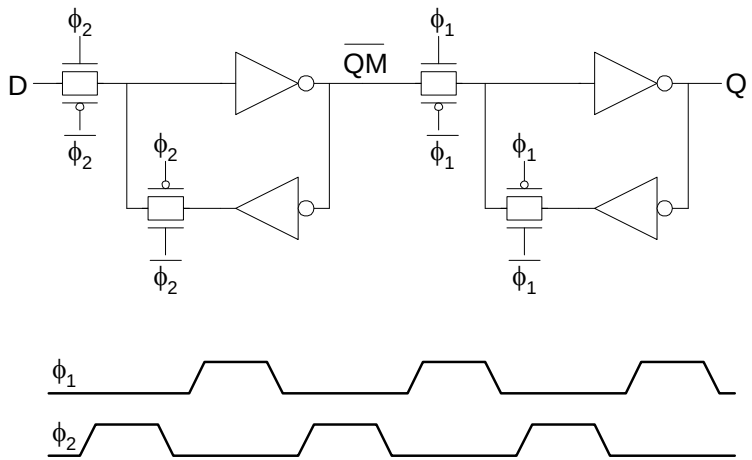
- Nonoverlapping clocks can prevent races
  - As long as nonoverlap exceeds clock skew
- We will use them in this class for safe design
  - Industry manages skew more carefully instead